Technical Support
support@nuvationenergy.com

Sales Inquiries
sales@nuvationenergy.com
855-261-0507

Nuvation Energy Low-Voltage BMS

NUV300 Datasheet

Document ID: NE-DS-002 | Revision: 2.4, 2021-07-09

© 2021 Nuvation Energy

Table of Contents

1. System Overview . . . 1
   1.1. Low-Voltage BMS . . . 3
   1.2. Cell Interface . . . 5
2. Operating Limits . . . 6
   2.1. Low-Voltage BMS . . . 6
      2.1.1. Electrical Characteristics . . . 6
      2.1.2. Environmental Conditions . . . 8
      2.1.3. Standards and Certifications . . . 8
   2.2. Cell Interface . . . 9
      2.2.1. Electrical Characteristics . . . 9
      2.2.2. Environmental Conditions . . . 9
      2.2.3. Standards and Certifications . . . 10
3. Mechanical Overview . . . 11
   3.1. Low-Voltage BMS . . . 11
   3.2. Cell Interface . . . 13
      3.2.1. Optional DIN rail mounting Kit . . . 13
4. Ordering Information . . . 15
   4.1. Low-Voltage BMS . . . 15
   4.2. Cell Interface . . . 15
5. Document Revision History . . . 17

1. System Overview

The Nuvation Energy Low-Voltage BMS is a complete battery management system that provides cell balancing and charge management for virtually any battery chemistry using a Low-Voltage BMS. The Low-Voltage BMS is designed for input voltage of 11–60 V DC. It can manage up to 12 or 16 battery cells in series and can be expanded to manage additional cells with a Nuvation Energy Cell Interface module.

> The input voltage range of 11–60 V DC applies with or without a Cell Interface expansion module.

Available modules are listed below.

Table 1. Low-Voltage BMS Modules

Model	Module Name
NUV300-BC-12-NC	Low-Voltage BMS - 12 channel, no CAN
NUV300-BC-16-NC	Low-Voltage BMS - 16 channel, no CAN
NUV300-BC-12	Low-Voltage BMS - 12 channel
NUV300-BC-16	Low-Voltage BMS - 16 channel
Expansion Module	
NUV100-CI-12-1	Cell Interface - 12 channel
NUV100-CI-16-1	Cell Interface - 16 channel

An example single-stack system with a 12 or 16 channel configuration is shown in Figure 1. This configuration requires a single Low-Voltage BMS.

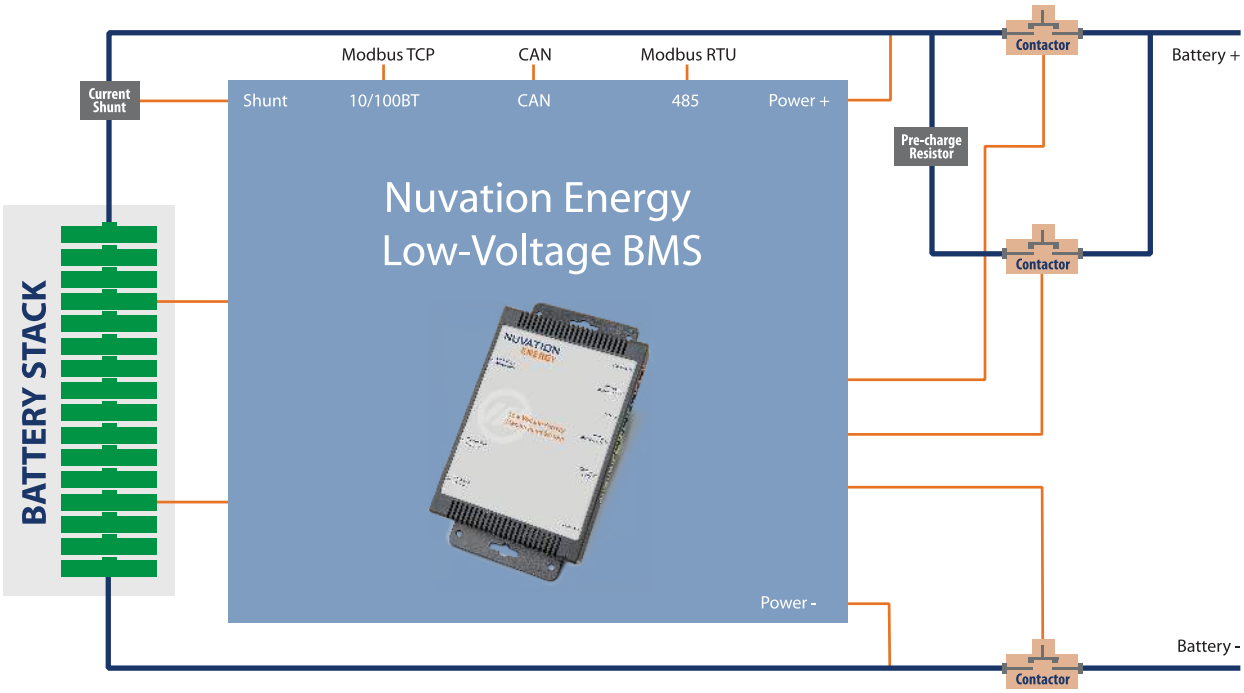

Figure 1. Nuvation Energy Low-Voltage BMS Single-Stack System Overview

An example multi-stack system with a 24-channel configuration is shown in Figure 2. This configuration requires a Low-Voltage BMS and a Cell Interface expansion module.

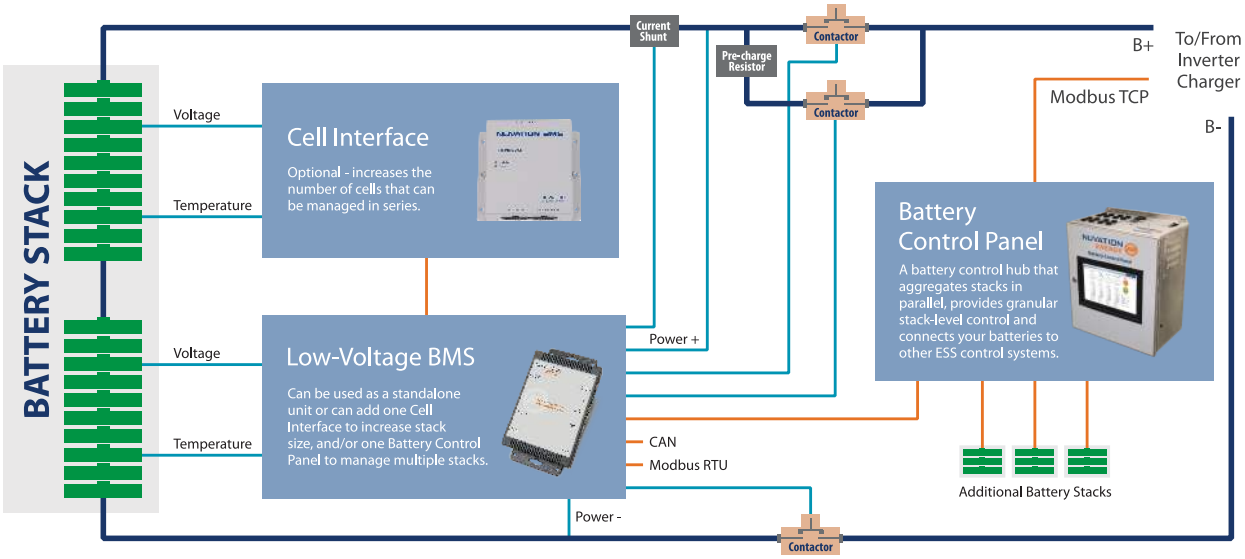

Figure 2. Nuvation Energy Low-Voltage BMS 24-channel, Multi-stack System Overview

1.1. Low-Voltage BMS

The Low-Voltage BMS contains analog-to-digital measurement circuitry which reads cell voltage, current, and temperature values. It also contains processing capability and software to support decision making and allow it to operate as a stand-alone Nuvation Energy Low-Voltage BMS.

The Low-Voltage BMS is available in the following variants:

1. The NUV300-BC-12-NC which can monitor up to 12 voltage channels (no CAN support)
2. The NUV300-BC-16-NC which can monitor up to 16 voltage channels (no CAN support)
3. The NUV300-BC-12 which can monitor up to 12 voltage channels (includes CAN support)
4. The NUV300-BC-16 which can monitor up to 16 voltage channels (includes CAN support)

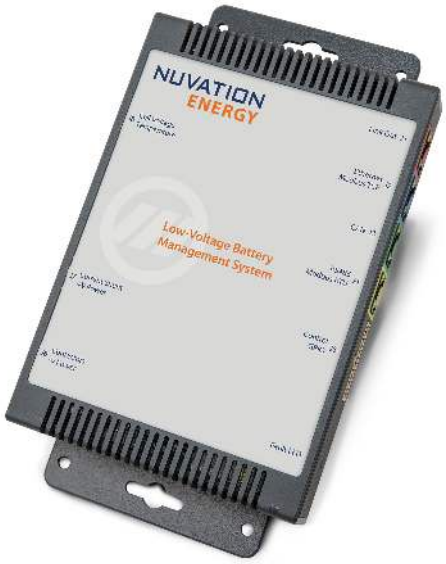

Figure 3. Nuvation Energy Low-Voltage BMS Module

The external interfaces to this module are:

- Cell voltage and temperature sense connector
- Current shunt connector
- 4 contactor coil driver outputs
- 4 optically isolated digital inputs
- 4 optically isolated digital outputs
- 10/100 Base-T Ethernet port (Modbus-TCP)
- Isolated CAN 2.0 port (not available in no-CAN variant (*-NC))
- Isolated RS-485 (Modbus-RTU) port
- Expansion interface connector for additional Cell Interface modules

- Fault and communication indicator LEDs

1.2. Cell Interface

The Nuvation Energy Cell Interface is the direct link between the individual battery stack cells and the rest of the battery management system. It facilitates battery monitoring and balancing functionalities.

In a Low-Voltage BMS, a larger battery stack can be accommodated with the addition of one or more Cell Interface modules, provided the total stack voltage does not exceed maximum rating of the default configuration. When coupled with a Low-Voltage BMS, the Cell Interface model must match the Low-Voltage BMS model—i.e. A Low-Voltage BMS - 12 channel can only be coupled with a Cell Interface - 12 channel, and a Low-Voltage BMS - 16 channel can only be coupled with a Cell Interface - 16 channel. The firmware does not support a mixed chain of different Cell Interface variants.

The following are variants of the Nuvation Energy Cell Interface:

- The NUV100-CI-12-1, Cell Interface - 12 channel can monitor up to 12 series-connected cells
- The NUV100-CI-16-1, Cell Interface - 16 channel can monitor up to 16 series-connected cells

Figure 4. Nuvation Energy Cell Interface Module

The external interfaces to this module are:

- Battery cells connector
- Temperature sensors connector
- 2 Link Bus connectors
- 2 Indicator LEDs

2. Operating Limits

2.1. Low-Voltage BMS

Exceeding the maximum ratings will damage the Low-Voltage BMS module.

2.1.1. Electrical Characteristics

Symbol	Parameter	Conditions	Min	Typ	Max	Units
		Stack Power Specifications				
+VPOWER	Input DC Voltage	-	11	48	60	V
	Input Current	+VPOWER = 48 V DC	70	580	1250	mA
		Battery Cells Specifications				
C(n)	Input Cell Voltage Range	-	0	-	5	V DC
Vsum	Voltage between C0 and C12	Low-Voltage BMS - 12 channel	11	-	60	V DC
	Voltage between C0 and C16	Low-Voltage BMS - 16 channel	22	-	60	V DC
	Voltage between C0 and C8	Low-Voltage BMS - 16 channel	11	-	40	V DC
	Voltage between C8 and C16	Low-Voltage BMS - 16 channel	11	-	40	V DC
TME	Total Measurement Error	-	±0.1	±1.2	±1.6	mV DC
I(n)	Cell Balancing Current	C(n) = 4 V DC	304	307	310	mA DC
V_{bal}	Cell Voltage for Balancing		1.1	-	-	V DC
		Temperature Sensors Specifications				
I(n)	Output Current to Temperature Sensor	-	-	-	300	µA
Rt(n)	Temperature Sensor Resistance at 25C	-	-	10	-	kΩ
T(n)	Input Temperature Sensor Voltage Range	Cell 0 = 0 V DC	0	-	3	V
		Contactors Specifications				
+VCOIL	External Coil Power Supply Input	-	5	24	40	V DC
	External Coil Power Supply Continuous Current	+VCOIL = 24 V DC	-	-	2.8	A DC
	External Coil Power Supply Pulse Current (<150 ms)	+VCOIL = 24 V DC	-	-	20	A DC
+24V	Output Voltage	-	-	24	-	V DC
	Output Continuous Current	-	-	-	1	A DC
	Output Pulse Current (<150 ms)	-	-	-	2.4	A DC
COIL(n)	Coil Driver Output Voltage	-	-	+VCOIL	-	V DC
	Coil Driver Output Continuous Current	+VCOIL = 24 V DC	-	-	2.8	A DC
	Coil Driver Output Pulse Current (<150ms)	+VCOIL = 24 V DC	-	-	5	A DC
	Reverse Clamp Voltage	+VCOIL = 24 V DC	40	-	49	V DC
		Ethernet Specifications				
ETH_Protocol	Ethernet data speeds	-	10	-	100	Base-T
ETH_Connector	Ethernet jack rating	-	-	Cat5e	-	

Symbol	Parameter	Conditions	Min	Typ	Max	Units
		Current Shunt Specifications				
VSHUNT_REF	Reference Output Voltage	-	-	1.25	-	V DC
	Reference Output Current	-	-250	0	250	µA DC
Vdiff	Differential voltage between VSHUNT_BAT and VSHUNT_LOAD	-	-1.0	0	1.0	V DC
Vmes	Measurement resolution	-	-	143	-	nV DC
		GPIO-Out Specifications				
Vmax	Open Blocking Voltage	Between *_A and *_B, or between *_B and *_A	-	-	60	V DC
Imax	Closed Maximum Current	Between *_A and *_B, or between *_B and *_A	-	-	400	mA DC
Ron	Closed-State Resistance	Between *_A and *_B, or between *_B and *_A	-	-	2	Ω
		GPIO-In Specifications				
Turn-On	Turn On Threshold Voltage	-	0	-	3.8	V DC
	Turn-On Threshold Current	-	-	0.25	2	mA DC
Turn-Off	Turn-Off Threshold Voltage	-	4.8	-	5	V DC
	Turn-Off Threshold Current	-	0.1	0.2	-	mA DC
Vmax	Off Voltage	Iin = 0 mA	-	-	5	V DC
Imax	On Current	Vin = 0 V	-	-	9	mA DC
		RS-485 Modbus-RTU Specifications				
Rterm	Termination resistance tolerance	-	118.8	120	121.2	Ω
	Power rating	-	-	-	0.125	W
|Vod|	Driver differential output	-	1.5	2	-	V
Io	Output current	-	-60	-	60	mA
tr	Output Signal Rise Time	-	0.3	0.7	1.2	µs
tf	Output Signal Fall Time	-	0.3	0.7	1.2	µs
Isolation	Rated Isolation	-	-	-	60	V
		Link Out Specifications				
IP_LINK	Output Current	-	-	-	20	mA DC
IN_LINK	Output Current	-	-	-	20	mA DC
		CAN Specifications (not available in no-CAN variant (*-NC))				
Rterm	Termination resistance tolerance	-	118.8	120	121.2	Ω
	Power rating	-	-	-	0.125	W
CAN_P	Dominant Output	-	2.9	3.5	4.5	V DC
	Recessive Output	-	2	2.3	3	V DC
	Output Current	-	10	-	70	mA DC
	Output Signal Rise Time	-	-	20	50	ns
	Output Signal Fall Time	-	-	20	50	ns
CAN_N	Dominant Output	-	0.8	1.2	1.5	V DC
	Recessive Output	-	2	2.3	3	V DC
	Output Current	-	10	-	70	mA DC
	Output Signal Rise Time	-	-	20	50	ns
	Output Signal Fall Time	-	-	20	50	ns
Isolation	Rated Isolation	-	-	-	60	V

While Low-Voltage BMS is designed for an input voltage of 11–60 V DC, testing has confirmed that the unit experiences no degradation when using an input voltage up to 68 V DC. However, for applications that exceed 60 V DC, please consider Nuvation Energy High-Voltage BMS or contact support@nuvationenergy.com.

The +VPOWER input current depending on the loads the Low-Voltage BMS is driving. Without contactors, the Low-Voltage BMS draws approximately 70 mA at 48 V DC. With all contactors connected and energized, it can draw up to 1.25 A at 48 V DC.

Nuvation Energy BMS does not include an internal free-wheeling protection diode on contactor coil-driver circuits, as it has been found to cause premature contactor failure.

2.1.2. Environmental Conditions

Symbol	Parameter	Min	Typ	Max	Units
	Thermal Specifications				
Ta	Operating Temperature	-40	25	50	°C
	Storage Temperature	-40	25	50	°C
	Humidity Specifications				
RH	Operational RH	5	-	85	%
	Storage RH	5	-	85	%
	Shock and Vibration Specifications				
Vertical	Vertical shock/vibration	-	-	10	m/s^2
Longitudinal	Longitudinal shock/vibration	-	-	10	m/s^2
Transverse	Transverse shock/vibration	-	-	10	m/s^2
Pulse vibration	On each axis	-	-	245	m/s^2

The Low-Voltage BMS has been designed to meet the requirements of SAE J2464 (shock) and SAE J2380 (random vibration).

2.1.3. Standards and Certifications

The Low-Voltage BMS is designed to comply with industry EMC standards for FCC and IC Class A, and European EN55032 Class A. It is designed for EMI and ESD performance to EN55024, including the IEC/EN 61000-4-X series of tests. All components are EU RoHS / China RoHS compliant.

Standard/Certification		
Stationary Battery Safety	UL Recognized	UL 1973 (file no. MH64071)
Functional Safety	UL Recognized	UL 991 (file no. MH64071) UL 1998 (file no. MH64071)

UL 1973 recognition ensures safe battery operation and significantly reduce the effort of certifying the energy storage solution to meet UL 1973 and UL 9540.

2.2. Cell Interface

Exceeding the maximum ratings will damage the Cell Interface module.

When using a Cell Interface expansion module, please ensure the total maximum stack voltage does not exceed 60 V DC.

2.2.1. Electrical Characteristics

Symbol	Parameter	Conditions	Min	Typ	Max	Units
		Link In Specifications				
$+V_{BUS}$	Input Voltage	-	9	24	60	V DC
	Input Current, CI-12	+VBUS = 24 V DC, Link Out disconnected	-	-	25.5	mA DC
	Input Current, CI-16	+VBUS = 24 V DC, Link Out disconnected	-	-	31.7	mA DC
I_{P_LINK}	Output Current	-	-	-	20	mA DC
I_{N_LINK}	Output Current	-	-	-	20	mA DC
		Link Out Specifications				
$+V_{BUS}$	Output Voltage	-	-	+VBUS	-	V DC
	Output Current per CI-12	+VBUS = 24 V DC	-	-	25.5	mA DC
	Output Current per CI-16	+VBUS = 24 V DC	-	-	31.7	mA DC
I_{P_LINK}	Output Current	-	-	-	20	mA DC
I_{N_LINK}	Output Current	-	-	-	20	mA DC
		Battery Cells Specifications				
$C_{(n)}$ - $C_{(n-1)}$	Input Cell Voltage Range	CI-12, CI-16	0	-	5	Vdc
V_{sum}	Voltage between C0 and C12	CI-12, +VBUS = 0 V DC	11	-	60	V DC
	Voltage between C0 and C8	CI-16, +VBUS = 0 V DC	11	-	40	V DC
	Voltage between C8 and C16	CI-16, +VBUS = 0 V DC	11	-	40	V DC
TME	Total Measurement Error	CI-12, CI-16, +VBUS = 24 V DC	±0.1	±1.2	±1.6	mV DC
$I_{(n)}$	Cell Balancing Current (only for CI-12 and CI-16)	C(n) - C(n-1) = 4 V DC	304	307	310	mA DC
V_{bal}	Cell Voltage for Balancing	CI-12 and CI-16	1.1	-	-	V DC
		Temperature Sensors Specifications				
$I_{(n)}$	Output Current to Temperature Sensor	-	-	-	300	µA
$R_{t(n)}$	Temperature Sensor Resistance at 25 °C	-	-	10	-	kΩ
$T_{(n)}$	Input Temperature Sensor Voltage Range	Cell 0 = 0 V	0	-	3	V

2.2.2. Environmental Conditions

Symbol	Parameter	Min	Typ	Max	Units
	Thermal Specifications				

Symbol	Parameter	Min	Typ	Max	Units
T_a	Operating Temperature	-10	25	60	°C
	Storage Temperature	-20	25	60	°C
	Humidity Specifications				
RH	Operational RH	5	-	85	%
	Storage RH	5	-	85	%
	Shock and Vibration Specifications				
Vertical	Vertical shock/vibration	-	-	10	m/s^2
Longitudinal	Longitudinal shock/vibration	-	-	10	m/s^2
Transverse	Transverse shock/vibration	-	-	10	m/s^2
Pulse vibration	On each axis	-	-	245	m/s^2

The Cell Interface has been designed to meet the requirements of SAE J2464 (shock) and SAE J2380 (random vibration).

2.2.3. Standards and Certifications

The Cell Interface meets industry standards CISPR 22 Class A and IEC/EN 61000-4-2 for EMC/EMI and ESD respectively. It has been designed to meet EN 60950 high voltage creepage/clearance distances for reinforced insulation rated to 1250 V DC. All components are EU RoHS / China RoHS compliant.

Standard/Certification		
Stationary Battery Safety	UL Recognized	UL 1973 (file no. MH64071)
Functional Safety	UL Recognized	UL 991 (file no. MH64071) UL 1998 (file no. MH64071)

UL 1973 recognition ensures safe battery operation and significantly reduce the effort of certifying the energy storage solution to meet UL 1973 and UL 9540.

3. Mechanical Overview

3.1. Low-Voltage BMS

The overall dimensions of the Low-Voltage BMS are 220 mm × 125 mm × 30 mm.

Extra space should be provided around the module to allow for easy installation/maintenance.

The Low-Voltage BMS should be securely mounted in a vertical orientation, in an environment that permits free movement of air through all ventilation slots for convection cooling. The *Battery Cells and Temperature Sensor* connector should be facing up or to the left. If this is to be used with a battery chemistry such as lead-acid—which does not require balancing—the Low-Voltage BMS may be mounted horizontally, with the ventilation slots oriented upwards.

It is not advisable to mount the Low-Voltage BMS on the underside of a horizontal surface.

The Low-Voltage BMS weighs approximately 400 g.

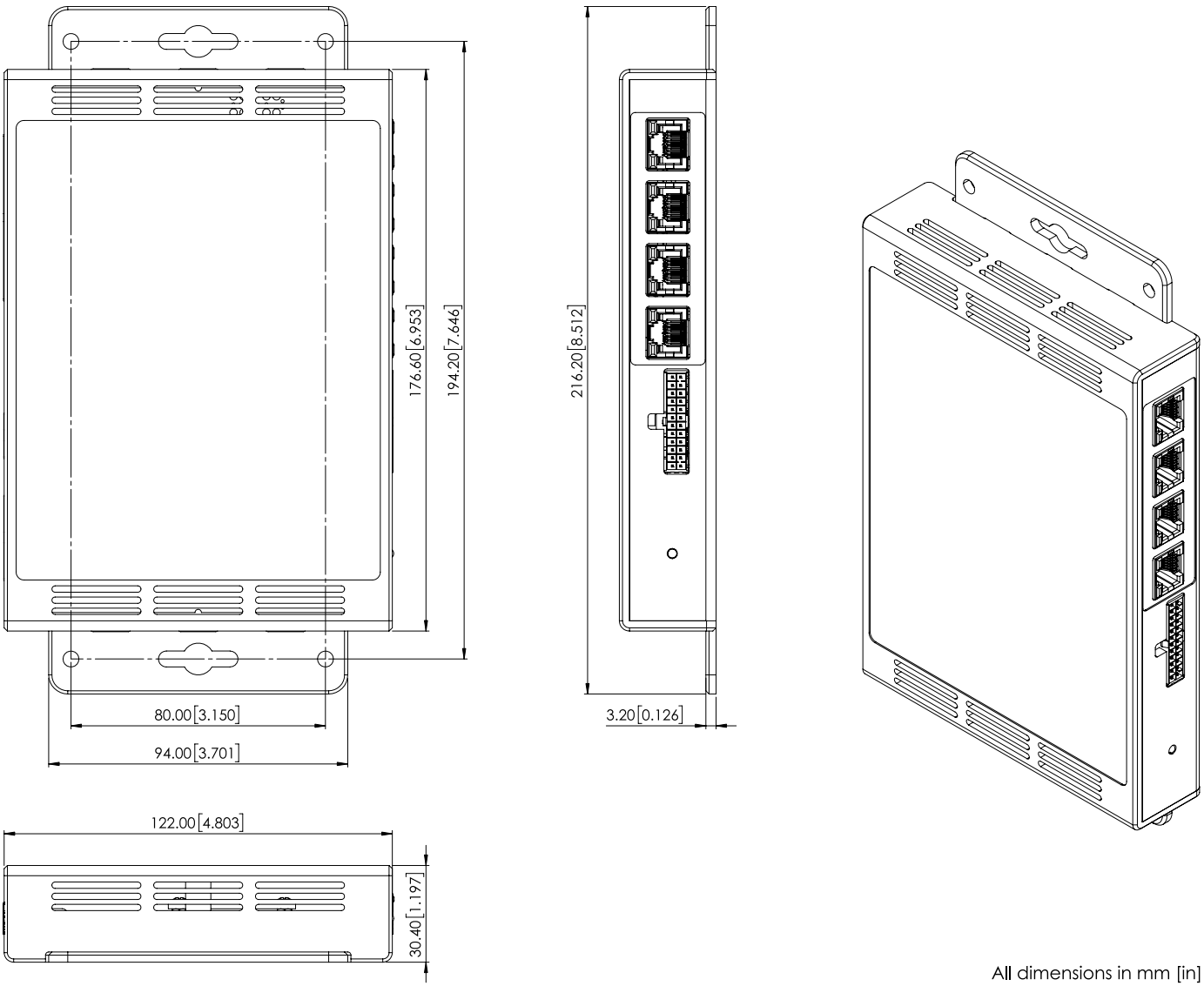

Figure 5. Mechanical Drawing of Low-Voltage BMS

3.2. Cell Interface

The overall dimensions of the Cell Interface are 104.4 mm × 121.58 mm × 40.6 mm. The standard Cell Interface (i.e. with bulkhead) weighs approximately 450 g.

The Cell Interface is available in a bulkhead-mountable enclosure as shown in Figure 6. The enclosure has five metal walls, leaving the back of the unit fully exposed.

It must be mounted to a metal bulkhead panel such that the panel covers the exposed back.

The NUV100-CI-12-1 and NUV100-CI-16-1 variants produce up to 24 W and 32 W, respectively, during cell balancing. A portion of this heat is transferred to the bulkhead.

Extra space should be provided around the module to allow for easy installation/maintenance.

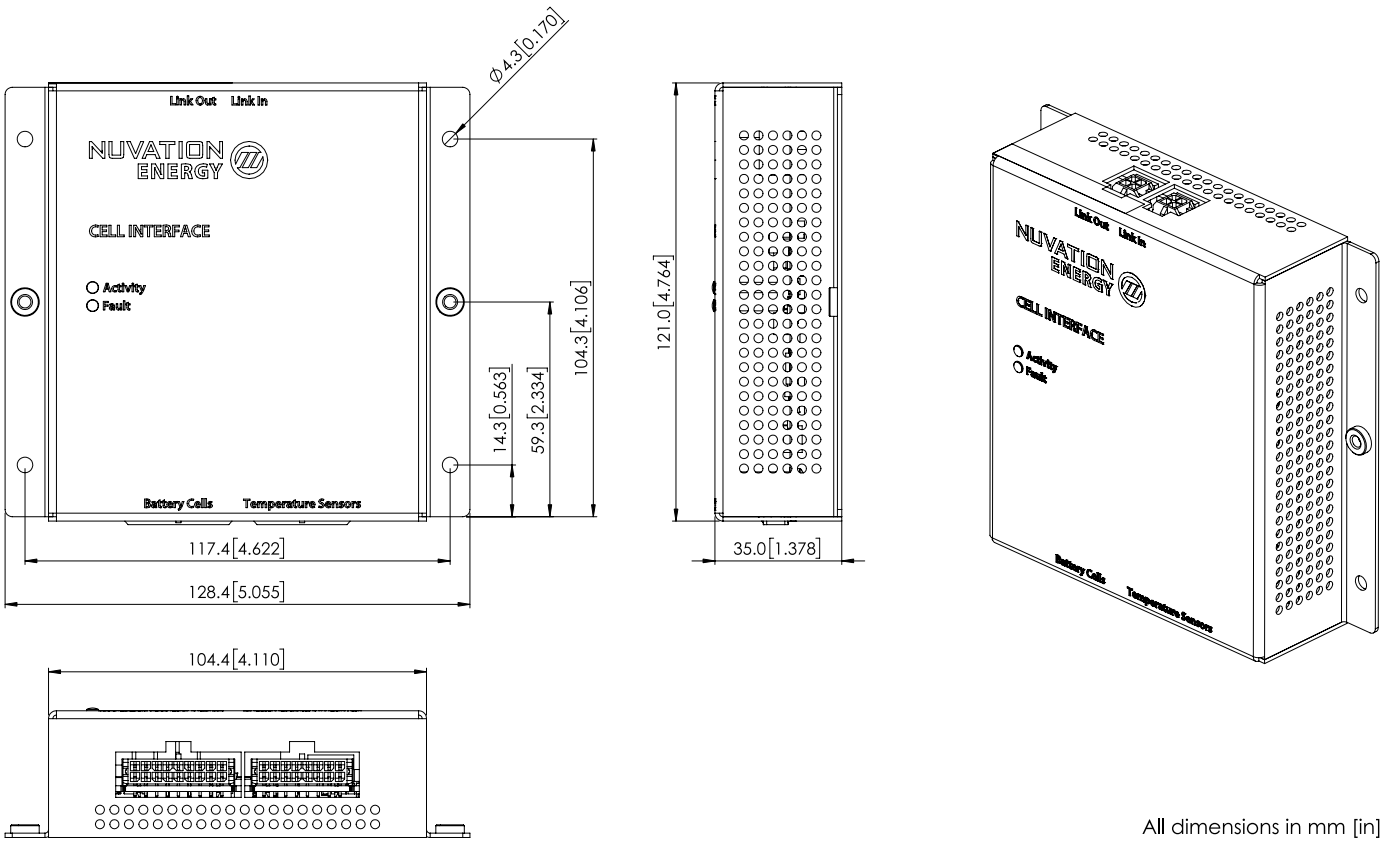

Figure 6. Mechanical Drawing of Cell Interface with Bulkhead Enclosure

3.2.1. Optional DIN rail mounting Kit

For applications requiring DIN rail mounting, the Cell Interface may be ordered with the Cell Interface Mounting Bracket (Bulkhead-to-DIN) kit. This kit is sold separately, and includes a metal plate and the necessary hardware to securely mount the standard Cell Interface (i.e. with bulkhead enclosure) to EN50022-compliant DIN rails, as shown in Figure 7.

The Mounting Bracket kit assembly adds an extra 14.2 mm to the overall width of the Cell Interface

module, bringing it from 104.4 mm to 118.6 mm. The kit assembly holds the module approximately 7 mm away from the inside lip of the DIN rail.

The Mounting Bracket offsets the Cell Interface module from the center of the DIN rail approximately 30 mm upwards as shown in Figure 7.

A Cell Interface with the Mounting Bracket weighs approximately 540 g.

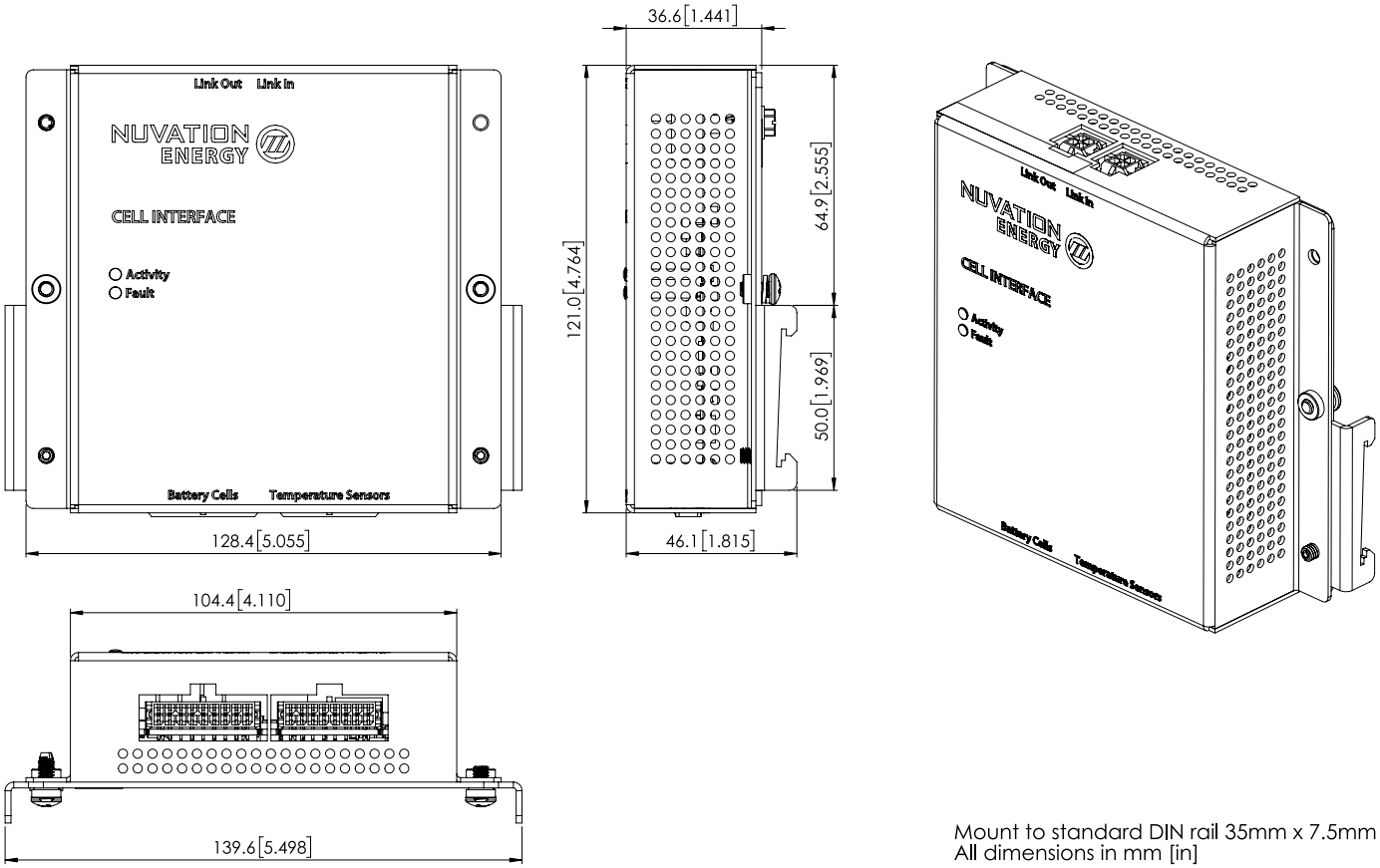

Figure 7. Mechanical Drawing of Cell Interface with Cell Interface Mounting Bracket (Bulkhead-to-DIN)

4. Ordering Information

4.1. Low-Voltage BMS

Product part numbers for ordering a Low-Voltage BMS are listed in Table 2.

> Low-Voltage BMS kits—which include the Low-Voltage BMS module and cables—are available to get you started quickly. Please visit https://nstore.nuvationenergy.com for more details.

Table 2. Low-Voltage BMS Ordering Information

Part Number	Product Name
NUV300-BC-12-NC-P	Low-Voltage BMS - 12 channel, no CAN
NUV300-BC-12-NC-U	Low-Voltage BMS - 12 channel, no CAN, PCB assembly only (no enclosure)
NUV300-BC-12-NC-KIT-nnn	Low-Voltage BMS Kit - 12 channel, no CAN (nnn denotes cable options)
NUV300-BC-16-NC-P	Low-Voltage BMS - 16 channel, no CAN
NUV300-BC-16-NC-U	Low-Voltage BMS - 16 channel, no CAN, PCB assembly only (no enclosure)
NUV300-BC-16-NC-KIT-nnn	Low-Voltage BMS Kit - 16 channel, no CAN (nnn denotes cable options)
Available as special order	
NUV300-BC-12-P	Low-Voltage BMS - 12 channel
NUV300-BC-12-U	Low-Voltage BMS - 12 channel, PCB assembly only (no enclosure)
NUV300-BC-12-KIT-nnn	Low-Voltage BMS Kit - 12 channel (nnn denotes cable options)
NUV300-BC-16-P	Low-Voltage BMS - 16 channel
NUV300-BC-16-U	Low-Voltage BMS - 16 channel, PCB assembly only (no enclosure)
NUV300-BC-16-KIT-nnn	Low-Voltage BMS Kit - 16 channel (nnn denotes cable options)

4.2. Cell Interface

Product part numbers for ordering a Cell Interface are listed in Table 3. Accessory kits are listed in Table 4.

> Cell Interface kits—which include the Cell Interface module and cables—are available to get you started quickly. Please visit https://nstore.nuvationenergy.com for more details.

Table 3. Cell Interface Ordering Information

Part Number	Product Name
NUV100-CI-12-1	Cell Interface - 12 channel, Bulkhead
NUV100-CI-12-U	Cell Interface - 12 channel, PCB assembly only (no enclosure)
NUV100-CI-12-KIT	Cell Interface Kit - 12 channel
NUV100-CI-16-1	Cell Interface - 16 channel, Bulkhead
NUV100-CI-16-U	Cell Interface - 16 channel, PCB assembly only (no enclosure)
NUV100-CI-16-KIT	Cell Interface Kit - 16 channel

Table 4. Cell Interface Accessory Kits Ordering Information

Part Number	Product Name
NUVP-CI-DIN-MB	Cell Interface Mounting Bracket (Bulkhead-to-DIN)

5. Document Revision History

Revision	Date	Details
2.3	2021-03-04	Initial Release
2.4	2021-07-07	Added Low-Voltage BMS, no CAN variant (*-NC) details

From time to time Nuvation Energy will make updates to Nuvation Energy BMS in response to changes in available technologies, client requests, emerging energy storage standards, and other industry requirements. The product specifications in this document, therefore, are subject to change without notice.

© 2021 Nuvation Energy